Type A Manhole
Depth to soffit 3.00 - 6.00m

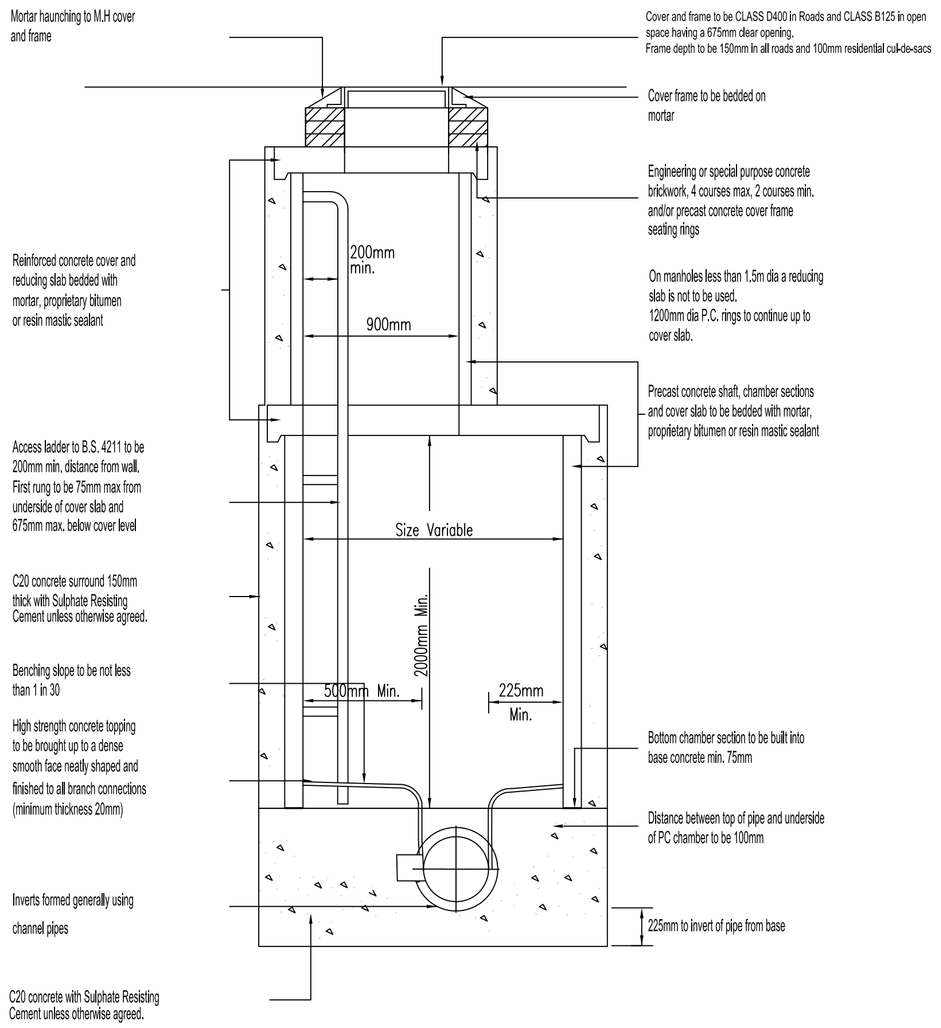

Type B Manhole
Depth to soffit 1.35 - 3.00m

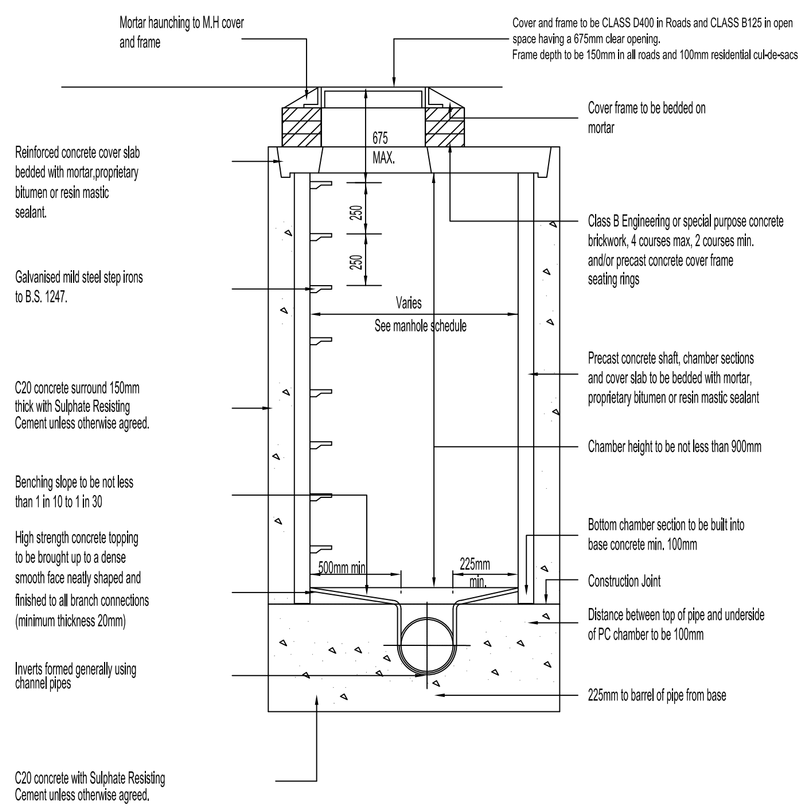

PIPE DIA. mm	ROCKER PIPE LENGTH mm
150-600	0.60
675~750	1.00
>825	1.25

TYPE B1/E
Depth to soffit less than 1.5m

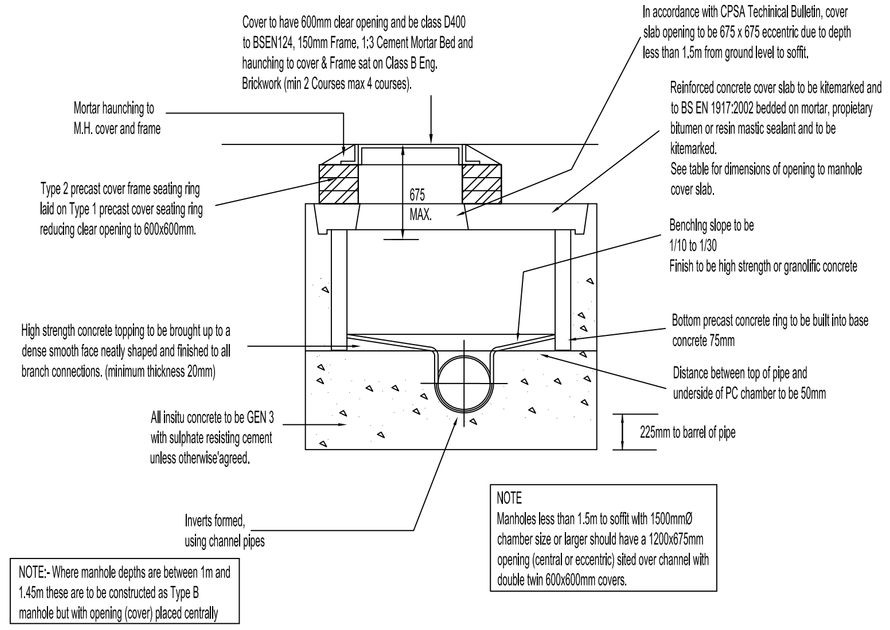

NOTE:- Where manhole depths are between 1m and 1.45m these are to be constructed as Type B manhole but with opening (cover) placed centrally

NOTE
Manholes less than 1.5m to soffit with 1500mmØ chamber size or larger should have a 1200x675mm opening (central or eccentric) sited over channel with double twin 600x600mm covers.

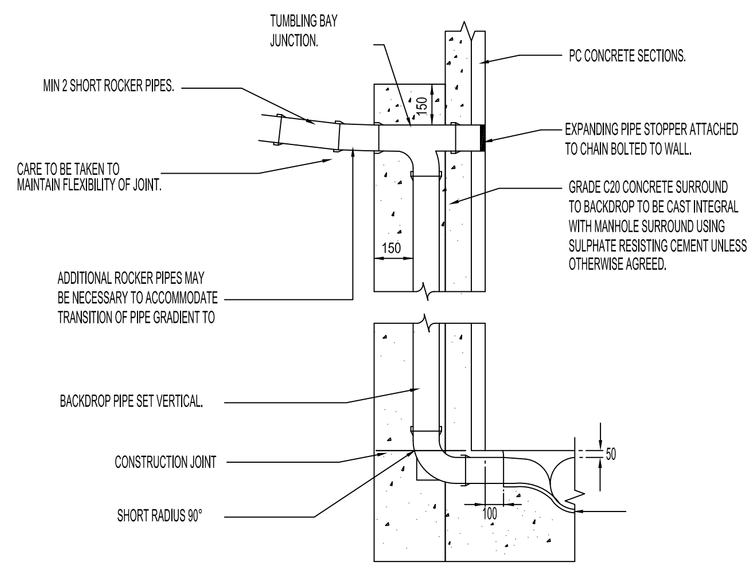

TYPICAL EXTERNAL VERTICAL BACKDROP DETAIL.

General Notes:-

A. DO NOT USE THIS DRAWING IN ISOLATION. This drawing has been prepared as part of a set, and must therefore be read in conjunction with all other drawings. Any discrepancies must be reported to the engineer prior to commencing works.

B. Third party information is used to prepare the engineering design (including, architectural layout, ground investigation, existing utilities records, and specialist design items). The engineering design must therefore be read in conjunction with all third party information prior to commencing work. Queensberry Design Ltd are not responsible for any third party information or details.

C. House type working drawings are to be used in conjunction with the plot setting out drawing.

D. Drawing status will remain preliminary until full technical approval is received from local authority and sewerage undertaker. Works commenced prior to technical approval are done so at risk and may be subject to change.

E. The contractor is expected to prepare appropriate construction method statements for all aspects of appointed work. This should include any temporary protection / works.

F. Land drainage is not permitted to discharge into the public sewer network. Any need for land drainage should be assessed by the ground worker and landscaper during construction and placement of gardens on an individual plot basis. If land drainage designs are required, they should be appointed prior to plot completion.

G. The contractor is expected to cross check all drainage inverts prior to commencing work, this may involve completion of trial holes if invert levels have been interpolated.

Highways
1. All highway works to be carried out in accordance with the current local authority design guide and specification
2. All excavations below proposed and existing highways to be back filled with granular Type 1 sub base and well compacted in layers not exceeding 150mm, unless otherwise agreed.
3. Highway authority to be notified by the contractor prior to the commencement of works.

Adoptable Drainage
1. All adoptable drainage works to be in accordance with the water authorities publication - "Sewers For Adoption 6th Edition" aswell as the approved drawings.

2. Precast concrete manhole rings to comply with the relevant provisions of BS5911: Part 200.

3. All brickwork to be Class B engineering complying with the relevant provisions of BS 3921. Concrete bricks maybe used if their specification is the same as Class B engineering bricks. Please seek approval from relevant water authority before using.

4. Manhole covers and frames shall comply with the relevant provisions of BS EN 124 and be of a non-rocking, non-ventilating design.

5. Ladders that are required in Type A manholes are to comply with "Sewers For Adoption 6th Edition".

6. Concrete must be either C20 sulphate resistant portland cement with high strength concrete topping to the benching or C35 ordinary portland cement

7. 150mm Concrete surround is required around pipes where the depth from finished surface to soffit of pipe is less than 1200mm. This may be reduced to 900mm within open space.

8. The location of existing drainage that is within close proximity to the proposed site works, which is not to be diverted, should be confirmed by the contractor and reported to the developer to ensure it corresponds to that shown on the engineering layout and that no proposed works are affected.

The position, line and diameter of all existing drainage apparatus should be confirmed on site prior to the commencement of the works. Any discrepancies must be reported to the engineer immediately.

The connection of foul and surface water drainage to the existing public sewer system shall be subject to the approval of the local sewerage undertaker. The contractor is expected to apply for relevant permits prior to commencing the work.

9. Roads and sewers contractor must inform water authority prior to works commencing

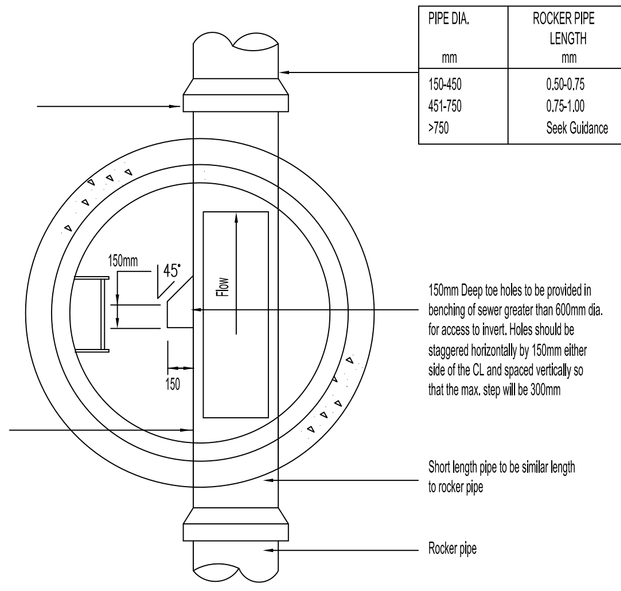

PIPE DIA. mm	ROCKER PIPE LENGTH mm
150-450	0.50-0.75
451~750	0.75-1.00
>750	Seek Guidance

Bedding Details

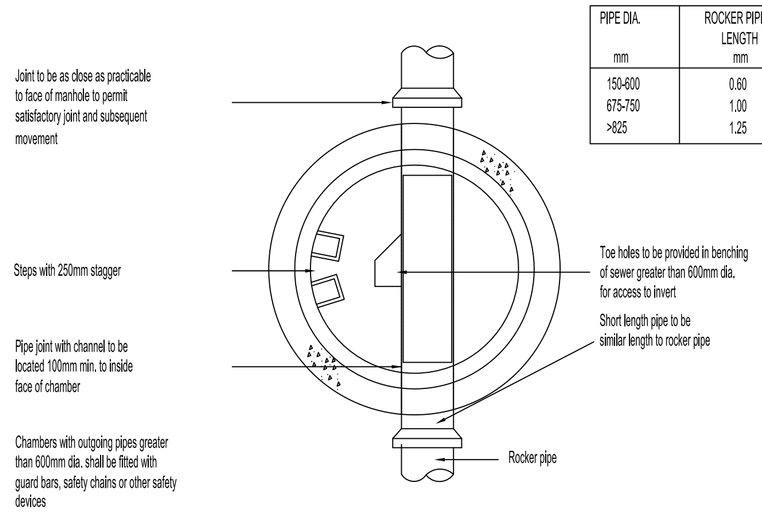

DIAMETER OF LARGEST PIPE IN MANHOLE (mm)	INTERNAL DIAMETER OF MANHOLE (mm)
less than 375	1200
375 - 700	1500
750 - 900	1800

ALL SEWERAGE WORKS TO BE IN ACCORDANCE SEWERS FOR ADOPTION - 6th EDITION.

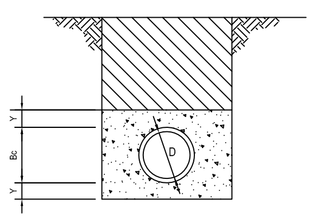

BED TYPE A
(In Highways where cover to pipes less than 1.2m)

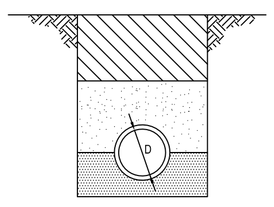

BED TYPE B
(In Open Ground)

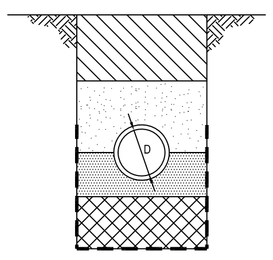

BEDDING IN AREAS OF DEEP SEATED SETTLEMENT
(In Open Ground)

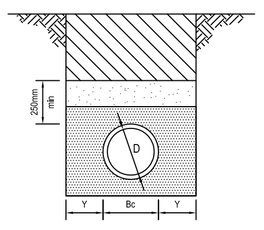

BED TYPE S
(In Highways)

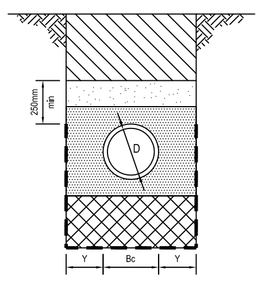

BEDDING IN AREAS OF DEEP SEATED SETTLEMENT
(In Highways)

Main back fill material compacted in layers not exceeding 250mm thick. To be Type 1 granular material under roads where directed

Initial back fill material not less than 250mm thick, Heavy compaction equipment not to be used.

Pipe zone material conforming to bedding table

C20 grade concrete with compressible fibre as described in table placed at each pipe joint to preserve flexibility

Sewer trench to be over-excavated by 300mm, backfilled with Type 1 granular material in 150mm layers and wrapped with Geogrid. Geogrid type to be specified by supplier. Subject to geotechnical approval.

Bedding Table

Diameter mm Max	Bc Y Pipe Bedding Trench Width		Material (min)	Single size (mm)	Graded (mm)
150	900	178	150	10 or 14	14-5
225	1021	271	150	10, 14 or 20	14-5 or 20-5
300	1160	410	150	10, 14 or 20	14-5 or 20-5
375	1240	490	150	14 or 20	14-5 or 20-5
450	1326	576	150	14 or 20	14-5 or 20-5
525	1420	670	150	14, 20 or 40	14-5, 20-5 or 40-5
600	1522	772	150	14, 20 or 40	14-5, 20-5 or 40-5

All granular material to comply with the requirments of BS 882:1983

Concrete Mixes and Workability
1. Standard concrete mixes in accordance with BS 5328 shall be used with a 20mm nominal maximum size of aggregate and a 75mm slump. Suitable applications for the concrete mixes are shown in the following table:

Standard Mix	Grade of concrete	Applications
ST1	C7.5	Fillings, blinding, soft spots and drainage surrys
ST4	C20	All other applications

2. Compressive strength testing shall not be used to judge the compliance of a concrete but, where required by the Engineer, the Developer shall provide evidence of the batch masses used to produce any concrete.

3. Admixtures (including calcium chloride and pigments) shall not be used in the production of concrete.

Compressible Filler and Packing for Pipelines
1. Compressible filler for interrupting concrete protection to pipes shall consist of bitumen impregnated insulating board to BS 1142: part 3 or other equally compressible material. The thickness of compressible filler shall be as follows:

Nominal diameter of pipe (mm)	Thickness of compressible filler (mm)
Less than 400	18
450 - 1200	36
Exceeding 1200	54

2. Compressible packing for use between pipes and pre cast concrete setting blocks shall consist of bitumen impregnated sheeting complying with BS 743

Mortar
1. Mortar shall be mixed only as and when required, in the relevant proportions indicated in the following table, until its colour and consistency are uniform. The constituent materials shall be accurately gauged, allowance being made for bulking of sand.

Alternative nominal mixes by volume		
Cement:lime:sand	Cement:sand	Cement:sand with plasticizer
1:½:3	1:3	1:2 to 3½

Rev A - Drawing revised following QDL review. FT 09 07 15

Drawing Status
FOR APPROVAL

Title
Barratt Homes & Taylor Wimpey
Luke's Lane, Monkton Phase 2
Adoptable Drainage Details

scale	Date
1:25 @ A1	July 2015
Drawn by FT	e-mail frank.teggarty@queensberrydesign.co.uk

Drawing no.	Revision	Client Contract no.
QD1081-08-01	A	-

QUEENSBERRY DESIGN
ENGINEERING & ARCHITECTURAL CONSULTANTS
NORTH EAST OFFICE
SUITE 7D, NETHERTON PARK, STANNINGTON
NORTHUMBERLAND, NE61 6EF T: 01670 789834
NORTH WEST & YORKSHIRE OFFICE
MORWICK HALL, MORTEC OFFICE PARK, YORK ROAD
LEEDS, LS15 4TA T: 0113 8232870
www.queensberrydesign.co.uk